MEGHA ENGINEERING & INFRASTRUCTURES LTD.

1X525 MW TUTICORIN (UNIT-1) AT THOOTHUKUDI DISTRICT TAMILNADU

TECHNICAL SPECIFICATION
FOR
VIBRATION ISOLATION SYSTEM
FOR

TD BFP (2 NOS) & MD BFP (1 NOS) FOUNDATION

SPECIFICATION NO. : PE-TS-422-614-C001 (Rev 0)

BHARAT HEAVY ELECTRICALS LIMITED
POWER SECTOR
PROJECT ENGINEERING MANAGEMENT
NOIDA-201301

CONTENTS

This Technical Specification consists of two Sections:

SECTION I

- SPECIFIC TECHNICAL REQUIREMENTS.

SECTION II

- STANDARD TECHNICAL SPECIFICATION.
- REFERENCE QUALITY PLAN

COMPLIANCE CERTIFICATE

The bidder shall confirm compliance to the following by signing/ stamping this compliance certificate and furnishing same with the offer.

01. The scope of supply, technical details, construction features, design parameters etc. shall be as per technical specification & there are no exclusion/ deviation with regard to same.

02. There are no deviation with respect to specification other than those furnished in the 'schedule of deviations.'

03. Only those technical submittals which are specifically asked for in NIT to be submitted at tender stage shall be considered as part of offer. Any other submission, even if made, shall not be considered as part of offer.

04. Any comments/ clarifications on technical/ inspection requirements furnished as part of bidder's covering letter shall not be considered by BHEL, and bidder's offer shall be construed to be in conformance with the specification.

05. Any changes made by the bidder in the price schedule with respect to the description/ quantities from those given in 'BOQ-Cum-Price schedule' of the specification shall not be considered (i.e., technical description& quantities as per the specification shall prevail).

06. QP will be subject to BHEL/Customer approval in the event of order & customer hold points for inspection/ testing shall be marked in the QP at the contract stage. Inspection/ testing shall be witnessed as per same apart from review of various test certificates/ Inspection records etc.

    The charges for 3rd party inspection (Lloyds, or equivalent) for imported components shall be included in the base price of the equipment by the bidder.

07. All drawings/data – sheets etc. to be submitted during contract shall be subject to BHEL/Customer review/ approval.

08. GA drawings/ datasheet / QP as submitted with offer at tender stage are for reference purpose only and shall be subject to approval during contract stage.

09. All sub vendors shall be subject to BHEL/CUSTOMER approval.

10. Any special tools & tackles, if required, shall be in bidder's scope.

SECTION-I

SPECIFIC TECHNICAL REQUIREMENTS

1.0 SCOPE

1.01 SUPPLY OF VIBRATION ISOLATION SYSTEM (VIS):

i) Vibration Isolation System (VIS)
ii) Tools and facilities required for erection and commissioning including seaworthy packing & transportation etc. complete.

1.02 SUPERVISION OF ERECTION AND COMMISSIONING OF THE VIS.

Vendor shall deploy experienced manpower for setting the VIS in position and final adjustments after machine installation. Vendor shall also confirm the readiness at site before deploying the manpower for supervision of erection. Vendor shall furnish proposed erection strategy of the entire system and procedure for replacement of VIS and downtime involved.

1.03 DESIGN & ENGINEERING FOR THE VIBRATION ISOLATION SYSTEM AND TOP DECK (INCLUDED IN VENDOR'S SCOPE)

Design and engineering shall consist of the following:

i) Selection of Vibration Isolation System (VIS).
ii) Static and dynamic analysis and design of RCC deck slab (supporting arrangement for the equipment supported on VIS)
iii) Calculation of loads on supporting structure along with their points of application and deflection limitations.
iv) Calculation should establish that not more than 5 % of the dynamic loads are transmitted to the substructure supporting VIS and that the foundation system meets the amplitude/frequency requirements.
v) Checking of stiffness for structure supported on VIS.

1.04 DOCUMENTATION

Vendor shall furnish following documents:

i) Bill of materials of various elements included in the supply along with detailed specifications of system and various items included in supply and standards local or international standards to which they conform.
ii) General Arrangement (GA) drawing showing location and supporting details of VIS. **(Included in vendor's scope).**
iii) GA and reinforced concrete details drawings for deck slab including bar bending schedule. **(Included in vendor's scope).**
iv) Embedment drawings showing location of all embedment and their details pertaining to RCC deck slab-**(Included in vendor's scope).**
v) Design document. **(Included in vendor's scope).**
vi) Methodology of providing the shuttering and its removal as well as concreting of deck slab, installation of VIS and sequence of above operation.
vii) Installation and maintenance manual indicating equipment, procedures, etc. necessary for installation/maintenance of VIS.
viii) List of power plants where such systems have been successfully installed for such applications.
ix) Performance certificate from the end user/customer for at least two successfully executed contracts for such system.

2.0 GENERAL:

2.1 In case of any conflict between section –I and section-II, section-I will prevail over section-II.

2.2 Steel helical springs and viscous damper shall be provided as vibration isolation system (VIS).

2.3 The supplier must have requisite experience and proven track record of similar installation in power plants of unit capacity not less than 500 MW.

2.4 Approved manufacturer will be used in which case the guaranteed life to be equal to the project life is to be provided by the BIDDER.

2.5 Bidder shall quote based on the input drawings as per Table-1 to satisfy the design requirement as per the relevant applicable codes in annexure- A and section - II.

Table-1

Sl. No	TITLE	DRAWING NO.
1	GENERAL ARRANGEMENT OF TDBFP SET	HY-DG-11800057779 (R0)
2	FOUNDATION ARRANGEMENT FOR BFP & DRIVE TURBINE (SH 1/3)	HY-DG - 1-31301-16735 (R0)
	FOUNDATION ARRANGEMENT FOR BFP & DRIVE TURBINE (SH 2/3)	HY-DG - 1-31301-16735 (R0)
	FOUNDATION ARRANGEMENT FOR BFP & DRIVE TURBINE (SH 3/3)	HY-DG - 1-31301-16735 (R0)
3	FOUNDATION ARRANGEMENT OF MDBFP SET	HY-DG-118000-57782(R0)
4	GENERAL ARRANGEMENT OF MDBFP SET	HY-DG-118000-57784(R0)

2.6 Bidder shall furnish the information about the entire range of spring units, damper units and spring cum damper units, manufactured by the vendor. The information to be furnished should include the load carrying capacity, stiffness (vertical & horizontal), damping resistance, dimension of spring and damper units as well as quality plan.

2.7 The steel helical springs and viscous damper supplied should be of proven make.

3.0 DOCUMENTS TO BE SUBMITTED BY VENDOR

3.1 Document submission schedule after the award of contract shall be as below:

PACKAGE	BHEL DRG NO	DRG TITLE	Drg Submission schedule
VIS FOR TD/MD BFP	**Primary Documents** - affecting Manufacturing/ Delivery Directly		
	PE-V0-422-614-C201	Data sheet of TD/MD BFP	R-0 within Two (02) weeks from LOI/PO & subsequent revisions within 10 days of comments received from BHEL/customer.
	PE-V0-422-614-C202	QAP FOR TD/MD BFP	
	PE-V0-422-614-C203	Test certificate of TD/MD BFP	
	PE-V0-422-614-C205	Static & dynamic Analysis of TD BFP	
	PE-V0-422-614-C204	Static & dynamic Analysis of MD BFP	
	PE-VO-422-614-C004	Civil GA drwg of TD BFP	
	PE-VO-422-614-C001	Civil GA drwg of MD BFP	
	Secondary Documents - NOT affecting Manufacturing / Delivery Directly		
	PE-VO-422-614-C005	RC details of TD BFP	R-0 within Two (02) weeks of Cat-I(or)II approval on GA drawing
	PE-VO-422-614-C002	RC details of MD BFP	

3.2 The documents shall be submitted as mentioned below:

i. Soft copy of all documents/drawings shall be furnished in pdf and AutoCAD format as applicable.
ii. Hard copies shall also be submitted.
iii. Submission of civil drawings/documents shall be as mentioned in the table-2.

Table-2

	Drawing	Document
For Approval	Soft copy + 5 nos. hard copies	Soft copy + 5 nos. hard copies
For RFC	Soft copy + 5 nos. hard copies	

4.0 SEISMIC LOADING:

The lateral forces will be established in accordance with the recommendations of IS-1893. The site falls in Zone-II as per IS 1893:2002. However all the structures have to designed and detailed as per provision of Zone-III. Importance factor (I) shall be taken as 1.75 (Table 2 of IS 1893 (PART IV): 2005).

5.0 WIND LOADING:

Wind loading will be in accordance with Indian Standard Code IS: 875 (Part 3) for a basic wind speed of 37 m/sec. Terrain Category-2 shall be considered for all structures.

Risk coefficient (k1), terrain category & topography factor shall be followed as per IS 875 (part III) for all structures.

6.0 MATERIAL OF CONSTRUCTION

i. Minimum grade of concrete: M35.
ii. Reinforcing bars will be TMT bars of grade Fe500 conforming to IS-1786.

7.0 MATERIAL (DESIGN & SUPPLY)

7.1 Steel helical springs and viscous dampers shall consist of:

i. Steel helical spring units and viscous dampers along with viscous liquid including associated auxiliaries for installation of the spring units and dampers like steel shims, adhesive pads, etc.

ii. Frames for pre-stressing of spring elements.

iii. Suitable hydraulic jack system including electric pumps, high pressure tubes etc. required for the erection, alignment etc. of the spring units. One set of extra hydraulic jacks, and hand operated pumps shall also be provided.

iv. Any other items may be required for the pre-stressing, erection, release of pre-stress, alignment and commissioning of the steel helical springs and viscous dampers.

7.2 The objective of designing the supporting arrangement for any rotating equipment shall be so that the vibration level is maintained as minimum as possible under all operating conditions. Accordingly respective rotating equipment shall be supported on RCC deck slab which in turn shall rest on vibration isolation unit consisting of steel helical springs and viscous dampers, which in turn shall be supported on RCC supporting structure. The above design shall form part of this specification.

7.3 The spring units should have stiffness in both vertical and horizontal directions with the horizontal stiffness not less than 30% of vertical stiffness. The stiffness should be such that the vertical natural frequency of any spring unit at its rated load carrying capacity is not more than 3 to 5 Hz.

7.4 The damper units or spring cum damper units should be of viscous type offering velocity proportional damping. The damper units should be suitable for temperatures ranging from 0 to 50^0 c. The damping resistance of the individual damper units should be such that the designed damping can be provided using reasonable number of units. Damper units shall have damping resistance ranging from 40kNsec/m to 750 kN-sec/m.

7.5 The sizes of the spring units, damper units, spring cum damper units should be such that groups of such units can be accommodated on column heads in case of elevated foundations and on pedestals/walls in case of foundations at ground level.

7.6 The steel helical springs and viscous dampers shall be designed for ensuring “fit and forget” guarantee.

8.0 MANUFACTURING & TESTING

8.1 Complete manufacturing and testing of the steel helical springs and viscous dampers shall be done at the manufacturing shop of the vendor. For this purpose the vendor shall submit the detailed programme for approval of customer and take up the manufacturing / testing after approval of such programme. The programme (quality plan) shall include:

i. Manufacturing schedule and quality check exercised during manufacturing.
ii. Detail of test to be carried out at the manufacturing shop with its schedule.

iii. Special requirements, if any, regarding concreting of top deck.
iv. Complete step- by- step procedure covering the installation and commissioning of the spring system.
v. Manuals for erection, commissioning, testing and maintenance of the steel helical springs and viscous dampers.
vi. A checklist for confirming the readiness of the civil fronts for erection of steel helical springs and viscous dampers.
vii. Checklist for equipment required at each stage of erection.
viii. Bill of materials (data sheet) of various elements such as spring units, viscous dampers, with their rating, stiffness etc. included in the supply.
ix. Bill of material (data sheet) for frames for pre stressing, hydraulic jack including electric pump, high pressure tubes, hand operated pump etc. with their rating and numbers.
x. Any other details which may be necessary to facilitate design and construction of the foundations / structures.

8.2 The springs shall conform to codes DIN 2089 and DIN 2096. The quality assurance and inspection procedure shall be finalised on the basis of the above codes and the quality plans be drawn accordingly.

9.0 ERECTION AND COMMISSIONING AND SUPERVISION

9.1 Complete erection and commissioning of the steel helical springs and viscous dampers including pre-stressing of elements, placing of elements in position, checking clearances on the shuttering of the RCC top deck, releasing of pre-stress in spring elements, making final adjustments and alignments etc. all shall be supervised by a specialist supervisor.

9.2 The scope of work shall be deemed to include all activities, which may not have been explicitly mentioned but are reasonably implied for the successful commissioning of steel helical springs and viscous dampers.

9.3 The vendor shall guarantee the performance of the steel helical springs and viscous dampers for 24 months from the date of commissioning of each machine which shall be termed as “Guarantee Period”.

10.0 REALIGNMENT OF SPRING SYSTEM

If any realignment of the steel helical springs and viscous dampers is required to be done for aligning the shaft or for any other reasons during the first one year of operation from the date of commissioning of the machine, the same shall be done by the vendor.

11.0 TRANSPORTATION

11.1 Steel helical springs and viscous dampers shall be suitably protected, coated, covered, boxed and crated to prevent damage or deterioration during transit and handling.

11.2 The vendor shall be responsible for any loss or damage during transportation, handling.

12.0 INSPECTION REQUIREMENTS

12.1 Minimum requirement for quality plan shall be as per quality plan attached in section –II of the specification. Quality plan shall be subject to approval during detail engineering. No price implication shall be admissible to QP approval by NHEL/Customer.
12.2 Inspection for imported item shall be done from third party like LIoyd or equivalent and certificate shall be submitted for review of BHEL.

12.3 In case of new bidder, bidder may need to carry out damping test, stiffness test etc. during customer approval stage before price bid opening. No price implication shall be admissible for these tests.

ANNEXURE-A

Codes and Standards

Latest revision of following codes shall be used for the design of the spring-supported foundations:

IS: 456 Codes practice for plain and reinforced concrete.
IS: 2974 Code of practice for design and construction of machine foundations.
IS: 1893 Criteria for earthquake resistant design of structures.
DIN: 4024 Machine foundations; Flexible supporting structures for machine with rotating masses .
DIN: 2089 Helical compression springs out of round wire and rod: calculation & design.
DIN: 2096 Helical compression springs out of round wire and rod: quality requirements for hot formed compression springs.

VDI: 2056 Criteria for assessing mechanical vibrations of machine.
VDI: 2060 Criteria for assessing the state of balance of rotating rigid bodies.

SECTION-II

STANDARD TECHNICAL SPECIFICATION

AND

REFERNCE QUALITY PLAN

1.0 SCOPE :

This section covers supply, supervision of erection commissioning & design engineering of the vibration isolation system (VIS) suitable for ID/PA/FD Fans/ TDBFP/MDBFP/ TURBOGENERATORS/ MILLS. The vibration isolation system shall be of proven make and should be in successful operation for similar machines.

2.0 SUPPLY OF VIBRATION ISOLATION SYSTEM (VIS)

VIS shall be supplied complete along with recommended spares if any. The selection of VIS shall be done by the vendor, in case not done by customer so that the amplitude at bearing locations are within permissible limits as per machine supplier recommendation or ISO 10816 whichever is governing and no dynamic loads are transferred to structure supporting VIS. Minimum 90% isolation shall be achieved and the system shall be capable of withstanding Seismic/Wind forces.

3.0 SUPERVISION OF ERECTION AND COMMISSIONING

3.01 Manual

Vendor shall supply installation and maintenance manual indicating equipment procedures etc. necessary for installation and replacement of VIS with downtime involved.

3.02 Tools and facilities

Vendor shall supply all tools and facilities as required for successful erection and commissioning of VIS. Vendor shall deploy experienced manpower to supervise successful installation of VIS.

4.0 DESIGN ENGINEERING OF VIBRATION ISOLATION SYSTEM

4.01 Dynamic Analysis

The dynamic analysis shall consist of free vibration analysis and forced vibration analysis. Isolation efficiency of at least 90% shall be obtained. The fundamental natural frequency shall be sufficiently above or below the frequency corresponding to operating speed. Vibration amplitude shall be calculated at all bearing locations and shall satisfy the permissible limits as per ISO 10816 or as specified by the machine supplier. Transient analysis shall be carried out for the short circuit / blade failure condition with an appropriate force function if required by the machine supplier. The forces for which substructure is to be designed shall be furnished.

4.02 Static Analysis

The static analysis shall include the

a) Dead weights of machine stationary parts
b) Dead weights of machine rotary parts
c) Loads due to machine power torque
d) Loads due to maximum allowable unbalance
e) Temperature loads
f) Loads due to blade unbalance/short circuit
g) Erection loads
h) Seismic loads
i) Any other loads given by the supplier

Various loads combinations must be investigated to obtain the most severe loads for foundation design purpose as per relevant IS codes or as per machine supplier recommendation whichever is more critical.

4.03 CHECK FOR SHAFT MISALIGNMENT

Foundation deck must be adequately stiff to withstand all operating load combinations without excessively upsetting the rotor shaft alignment. The structural design must carefully be analysed for relative deflection for the members supporting machine shaft to satisfy the limits as given by machine supplier if any.

4.04 DESIGN OF RCC DECK SUPPORTED ON VIS

Vendor shall provide General arrangement drawing of deck showing location and supporting detail of VIS, all embedment and their details as per the machine supplier drawing.
RCC design shall be done by working stress method for all machine foundations. Minimum reinforcement shall be governed by IS: 2974 as well IS:456.
All documents/drawings shall be supplied in 25 (twenty five) prints. All calculations shall be supplied in 6 (six) sets. Soft copy of the drawings in Auto Cad shall be supplied along with the soft copy of the documents supplied. All documentation shall be in English language and all RCC/structural design shall be conforming to the relevant Indian Standard Code of practice.

5.0 QUALITY PLAN AND TEST CERTIFICATE

Vendor shall furnish the quality plan and Test certificate for the hardware in their scope of supply. The quality plan shall be reviewed by BHEL/Consultant wherein the inspection and hold points shall be indicated. Vendor shall submit test certificate based on approved quality plan. Despatch of material by the vendor shall only take place after the receipt of Material Dispatch Clearance Certificate (MDCC) issued by BHEL/Consultant on the basis of test reports/test certificates submitted by the Vendor after manufacture.

6.0 ENVIRONMENTAL PROTECTION

VIS shall be suitably protected against environmental damages e.g. abrasion, discolouration, corrosion, oily water etc. to give a prolonged service matching the plant life.

REFRENCE QUALITY PLAN

MANUFACTURING QUALITY PLAN (I-QAP)

ITEM :
Equipment:
Spring Unit:

QP No:
Rev :
Date :
Page :

Sl. No. 1	COMPONENT AND OPERATION 2	CHARACTERISTICS 3	CLASS 4	TYPE OF CHECK 5	QUANTUM OF CHECK 6	REFERENCE DOCUMENT 7	ACCEPTANCE NORMS 8	FORMAT OF RECORD 9	AGENCY 10				REMARKS 11
									D	M	C	B	
1	Materials												
1.1	For boxes	Chemical/Mechanical	Minor	Verify	One / Heat	IS 2062/DIN EN 10025/ JVHT 02/JVHHT 01B00/SAILMA 350 HI/SAILMA 350 or equivalent	Same as column "7"	Certificate	√	P	V	V	
1.2	For Springs	a) Chemical	Major	Verify	One / Lot	50 Cr V 4 As per DIN 17221 or 51 Cr V 4 As per EN10089 or Equivalent	Same as column "7"	Certificate	√	P	V	V	
		b) Grain Size	Major	Verify	One / Lot	ASTM E 112	ASTM 5 or finer	Certificate	√	P	V	V	
		c) NMI	Major	Verify	One / Lot	IS 4163	ABCD series T/H-2.0/1.5	Certificate	√	P	V	V	
		d) Micro structure	Major	Verify	One / Lot	--	DIN 17221or equivalent	Certificate	√	P	V	V	
1.3	Springs at Manufacturer's end	Hardness	Major	Test	One/Lot	IS 1500	415-460 BHN	Certificate	√	P	V	V	
1.4	Springs at Manufacturer's end	Decarburization	Major	Test	One / Lot	IS 6396	Max. depth 0.5% of bar dia - partial	Certificate	√	P	V	V	
1.5	Springs at Manufacturer's end	NDE after compression	Major	Test	100%	IS 3703	No cracks	Certifcate	√	P	V	V	
1.6	Springs (at vendor end)	Spring Rate	Major	Test	AQL 4.0	DIN 2096	Same as column "7"	Lab Register	√	P	V	V	
1.7	Adhesive pads (jute),4mm thick, Steel shims	Dimensions (mm)	Minor	Measure / Visual	5 %	Drawing	DIN 7168 Sg	Internal Record	√	P	V	V	
1.8	Viscoliquid	Viscosity/ Penetration speed (mm/sec)	Major	Test	Sample	DIN 53019	Same as column "7"	Certificate	√	P	V	V	
1.9	Studs & Nuts	Chemical Dimensions (mm)	Minor Minor	Verify Measure	One / Lot 5%	IS 1367 (Grade 6.8 & Class 6) IS 4218 (Tolerance Class 6g & 6H)	Same as column "7" Same as column "7"	Lab Test Report	√	P	V	V	
2	In Process Inspection												
2.1	Welding	Visual / Surface exam (mm)	Major	Visual / Measure	10% on welds	Annexure-1(attached)	Same as column "7"	Certificate	√	P	V	V	
		NDE	Major	DPT	10% Random	ASTM / E 165	Same as column "7"	Certificate	√	P	V	V	
2.2	Boxes	Dimensions (mm)	Major	Measure	10%	Drawing & data sheet	EN ISO 13920 C	Internal record	√	P	V	V	
3	Final Inspection												
3.1	Shot Blasting	Picture	Major	Compare	10%	EN ISO12944-4	SA – 2 ½	Certificate	√	P	V	V	
3.2	Painting	Thickness (180 microns)	Major	Measure / Visual	10%	Annexure-2(attached)	Same as column "7")	Certificate	√	P	V	V	
3.3	Spring Unit	Dimensions (Except HF&HV)	Minor	Measure	10%	Drawing / Datasheet	EN ISO 13920 C	Internal Record	√	P	W	W	
3.4	Constant of Spring Units (Vertical; Kv)	Load Vs Displacement (kN/mm)	Critical	Test	10%	DIN 2096 & DIN 2089	Data Sheet	Certificate	√	P	W	W	
3.5	Document Control	Verification of above documents (TC/IR)	Major	Compare	All	MQP	Same as column "7"	Certificate	√	P	V	V	
3.6	Packing / Marking	Visual	Major	Visual / Compare	100%	As per vendor's standard	Same as column "7"	Certificate	√	P			

MANUFACTURER/ SUB-CONTRACTOR	CONTRACTOR	LEGEND: # RECORDS, IDENTIFIED WITH 'TICK' SHALL BE ESSENTIALLY INCLUDED BY MANUFACTURER IN QA DOCUMENTATION M: MANUFACTURER/ SUB-CONTRACTOR C: : MAIN SUPPLIER, B: BHEL/CUSTOMER INDICATE 'P' PERFORM 'W' WITNESS AND 'V' VERIFICATION		
SIGNATURE			REVIEWED BY	NAME & SIGNATURE OF APPROVING AUTHORITY WITH SEAL

ANNEXURE - 1

WELDING

WELDING DETAILS

Sl No	Imperfection Designation	Outside status	Limits for Imperfection with reference to quality level: DIN EN 25817 / D
1.	Excessive convexity	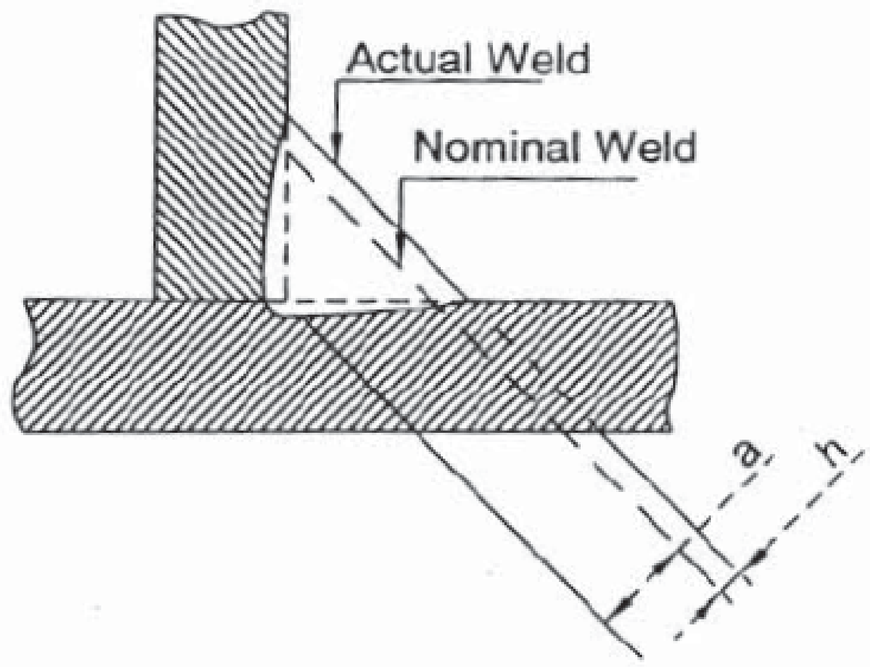	$h \leq 1mm + 0.25\ b$; max. 5mm
2.	Fillet weld having a throat thickness smaller than the nominal value	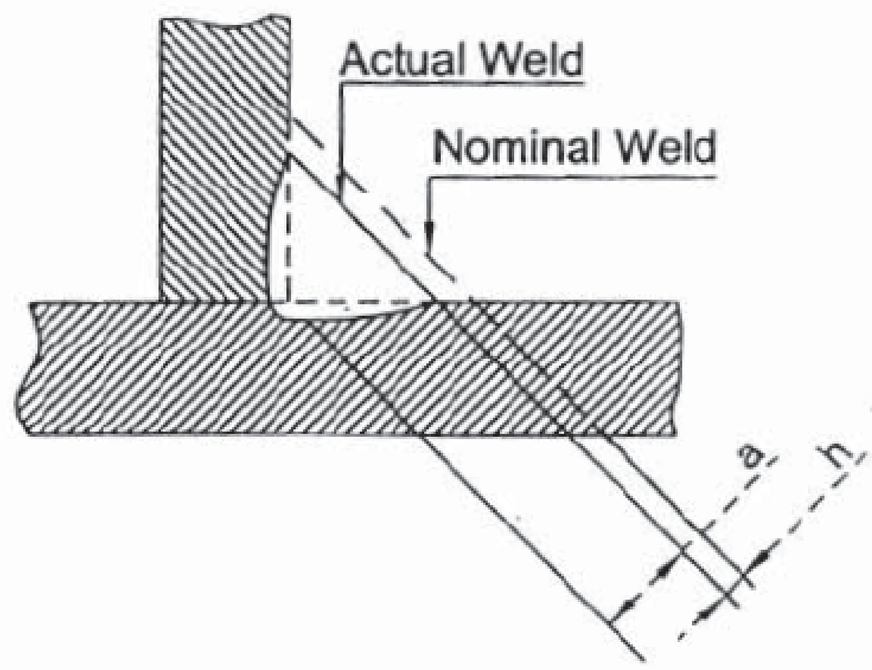 A fillet weld with an apparent throat thickness smaller than that prescribed should not be regarded as being imperfect if the actual throat thickness with a compensating greater depth of penetration complies with the nominal value.	Short imperfections: $h \leq 0.3$ mm + 0.1.a ; max. 2mm Long imperfections: Not Permitted
3.	Excessive asymmetry of fillet weld	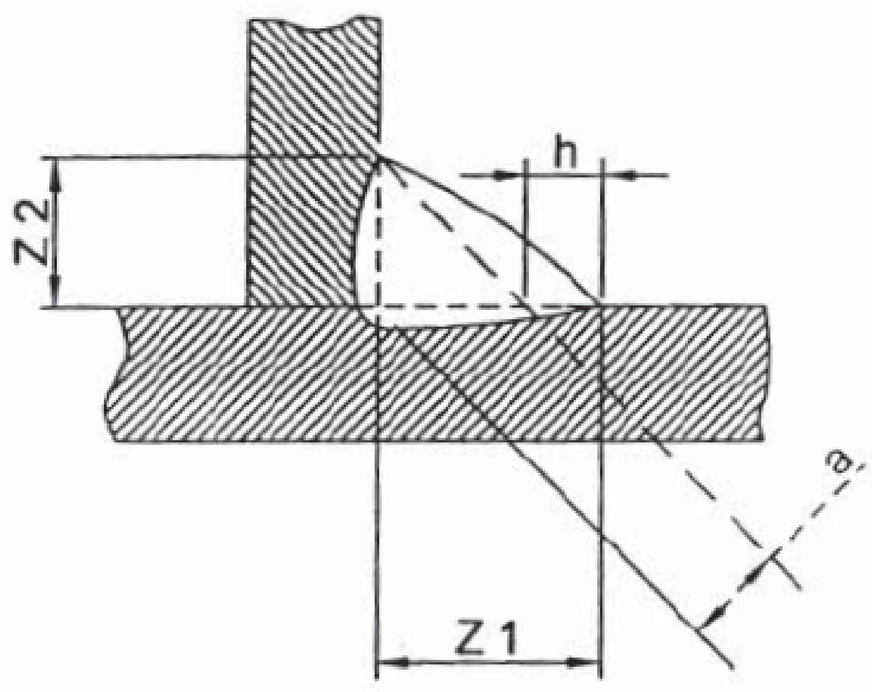 It is assumed that the asymmetric fillet weld has not been expresly prescribed.	$h \leq 2mm + 0.2\ a$

Sl No	Imperfection Designation	Outside status	Limits for Imperfection with reference to quality level: DIN EN 25817 / D
4.	Undercut	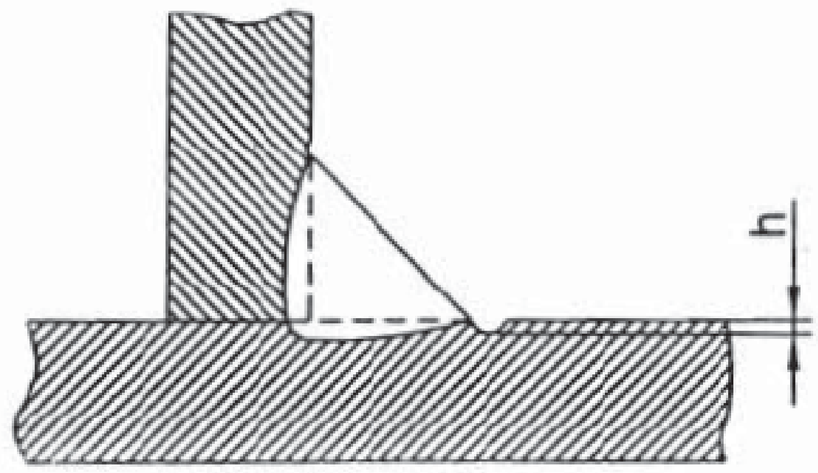 Smooth transition is required	$h \leq 1.5$mm
5.	Gas pores and porosity	The following conditions and limits for imperfections shall be fulfilled	
		a) Maximum dimension of the summation of the projected or surface crack area of the imperfection.	4%
		b) Maximum dimension of a single pore for -butt welds -fillet welds	 $d \leq 0.5$ s $d \leq 0.5$ a
		c) Maximum dimension for a single pore	5 mm
6.	Localised (clustered) porosity	The total pore area within the cluster should be summed and calculated as a percentage of the greater of the two areas; an envelop surrounding all the pores or a circle with a diameter corresponding to the weld width. The permitted porous area should be local. The possibility of masking other imperfections should be taken into consideration. The following conditions and limits for imperfections shall be fulfilled:	
		a) Maximum dimension of the summation of the projected or suface crack area of the imperfection	16%
		b) Maximum dimension of a single pore for -butt weld -fillet weld	 $d \leq 0.5$ s $d \leq 0.5$ a
		c) Maximum dimension for localised clustered porosity.	4mm

Sl No	Imperfection Designation	Outside status	Limits for Imperfection with reference to quality level: DIN EN 25817 / D
7.	Elongated cavities, worm holes	Long imperfections for -butt welds -fillet welds In any case, maximum dimension for elongated cavities, worm holes	 $h \leq 0.5$ s $h \leq 0.5$ a 2mm
		Short imperfections for -butt welds -fillet welds In any case, maximum dimension for elongated cavities, worm holes	 $h \leq 0.5$ s $h \leq 0.5$ a 4mm or Not Larger Than Thickness (NLTT)
8.	Solid inclutions (other than copper)	Long imperfections for -butt welds -fillet welds In any case, maximum dimension for elongated cavities, worm holes	 $h \leq 0.5$ s $h \leq 0.5$ a 2mm
		Short imperfections for -butt welds -fillet welds In any case, maximum dimension for elongated cavities, worm holes	 $h \leq 0.5$ s $h \leq 0.5$ a 4mm or Not Larger Than Thickness (NLTT)
9.	Lack of fusion (Incomplete fusion)		Permitted, but only intermittently and not breaking the surfaces
10.	Bad fit-up, fillet weld	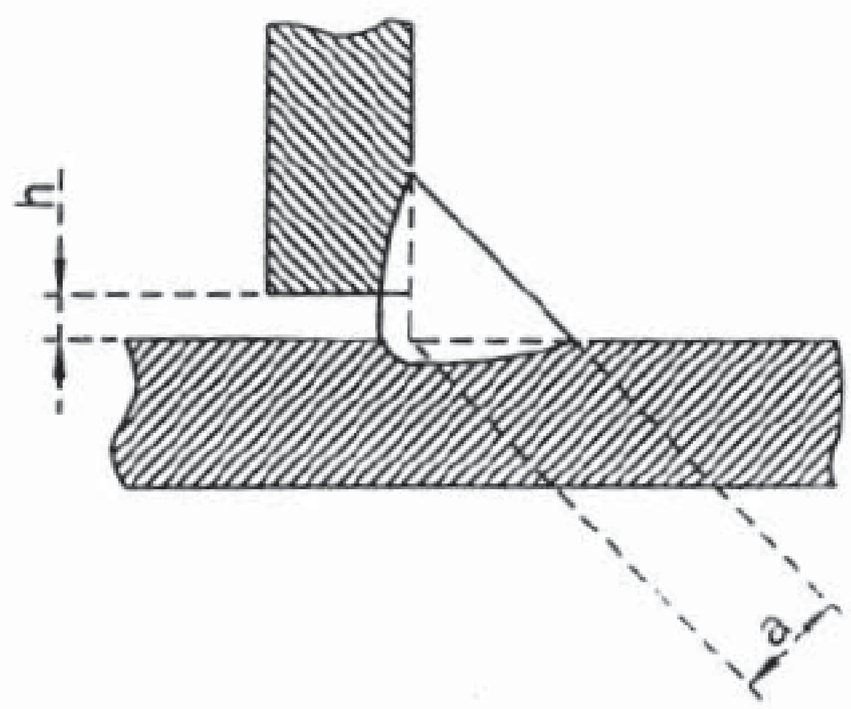 An excessive or insufficient gap between the parts to be joined. Gaps exceeding the appropriate limit may in cases be compensated for by a corrsponding increase in the throat.	$h \leq 1$mm + 0.3 a max. 4mm

Sl No	Imperfection Designation	Outside status	Limits for Imperfection with reference to quality level: DIN EN 25817 / D
11.	Incomplete penetration	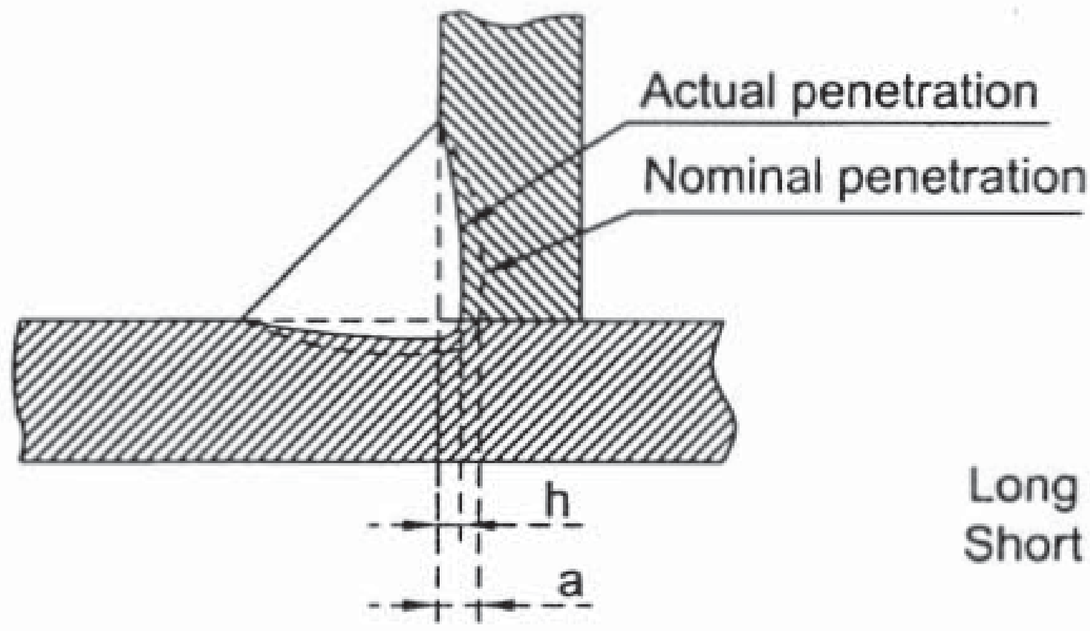	Long inperfections: Not permitted Short imperfections: h ≤ 0.2 s, max. 2mm
12.	Cracks	All types of cracks	Not Permitted
13.	Crater cracks		Permitted
14.	Spatters	Fused welding splashes are material trickless (drops) fused to the basic material or welding seam.	Permssible
15.	Stray flash or arc strike	Ignition points are local fuses caused by the electric arc on the surface of the basic material or welding seam.	Permssible

Abbreviations

a nominal fillet weld throat thickness (fillet thickness), in mm
b width of weld reinforcement, in mm
d pore diameter in mm
h size (height or width) of imperfection, in mm
l length of imperfction, in mm
s nominal butt weld thickness or, in the case of partial penetration, the prescribed depth of penetration, in mm
t tube-wall- or plate thickness, in mm
z leg length of fillet welds (in case of isoscele-right angle triangular section z = a . / 2) in mm

ANNEXURE-2
CORROSION PROTECTION PAINTING

REQUIREMENTS

1. Painting of steel parts

All steel parts must be coated immediately after short blasting according to EN-ISO 12944-4. Surface must be free of fat.

a. Material:
M/s Southfield paints –RAL 6011 Green or equivalent
M/s Toyo paints – RAL 1000 Black or equivalent
M/s Akzo Nobal Coatings India Pvt. Ltd. – RAL 1004 Yellow colour or equivalent

b. Execution:
Painting is performed as given below:
Layer thickness:
-Standard:
One layer coating thickness of minimum 100 microns.
-Long term protection:
Two layers coating to total thickness of minimum 180 microns.

c. Mixing of paint compounds:
The compounds (mother paint, accelerator, thinner) must be mixed according to instructions of the paint manufacture. The mixing procedure has to be adjusted to the ambient climatic situation.

d. Coating:
Coating is performed with spray gun. Baking temperature 80 ^{0}C. furnace exposing time 45 minutes.

e. Coating thickness control:
Measurements to be taken at 5 random points. Acceptable thickness is 10% below specified thickness.

2. Springs

All the springs must be powder coated by “Electrostatic powder coating spray process” (EPS).

a. Preparation:
Springs must be oil free
b. Execution:
Electrostatic spray coating with an epoxy polyester powder. Baking temperature 190 ^{0}C +10 ^{0}C. furnace exposing time of 40 minutes.
Colour: Black.
c. Coating thickness:
Coating thickness must be minimum of 70 microns.

Note.

1. The colour of paint is subjected to as per customer requirement.

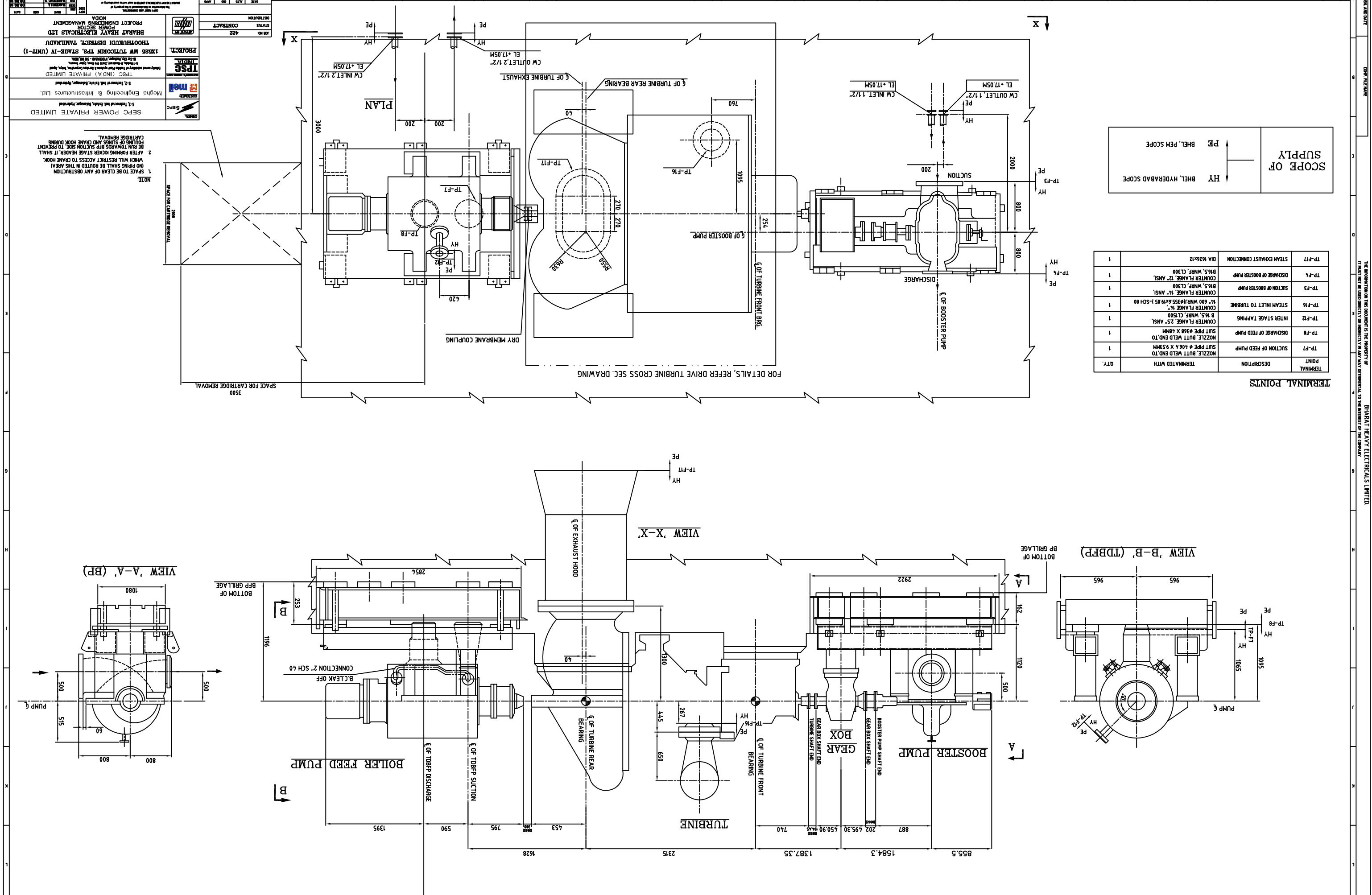

TERMINAL POINT	DESCRIPTION	TERMINATED WITH	QTY.
TP-F7	SUCTION OF FEED PUMP	NOZZLE, BUTT WELD END TO SUIT PIPE @ 406.4 X 9.53MM	1
TP-F8	DISCHARGE OF FEED PUMP	NOZZLE, BUTT WELD END TO SUIT PIPE @368 X 48MM	1
TP-F12	INTER STAGE TAPPING	COUNTER FLANGE, 25" ANSI, B 16.5, WNRF, CL.900	1
TP-F16	STEAM INLET TO TURBINE	COUNTER FLANGE 16", 16" 600 WNRJ(@355.6X19.05)-SCH 80	1
TP-F3	SUCTION OF BOOSTER PUMP	COUNTER FLANGE, 16" ANSI, B16.5, WNRF, CL300	1
TP-F4	DISCHARGE OF BOOSTER PUMP	COUNTER FLANGE, 12" ANSI, B16.5, WNRF, CL300	1
TP-F17	STEAM EXHAUST CONNECTION	DIA 1626X12	1

PRODUCED BY AN AUTODESK EDUCATIONAL PRODUCT

FIRST ANGLE PROJECTION

(ALL DIMENSIONS ARE IN mm)

DRG. NO. HY-DG-1-31301-16735 SH.01 OF 03

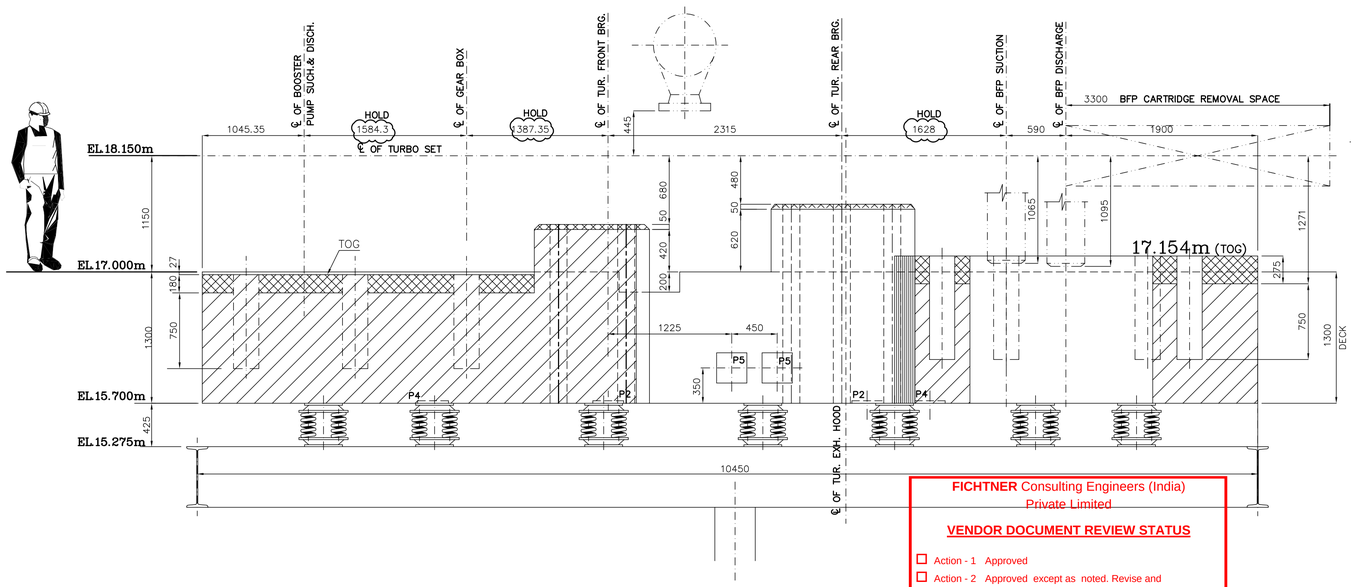

SECTION A–A

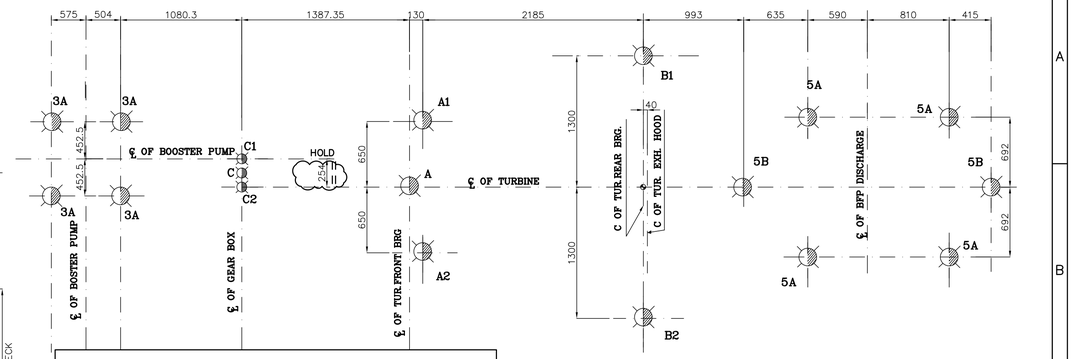

LOCATION OF LOAD POINTS ON FOUNDATION TOP DECK (FOR PUMP–A&B)

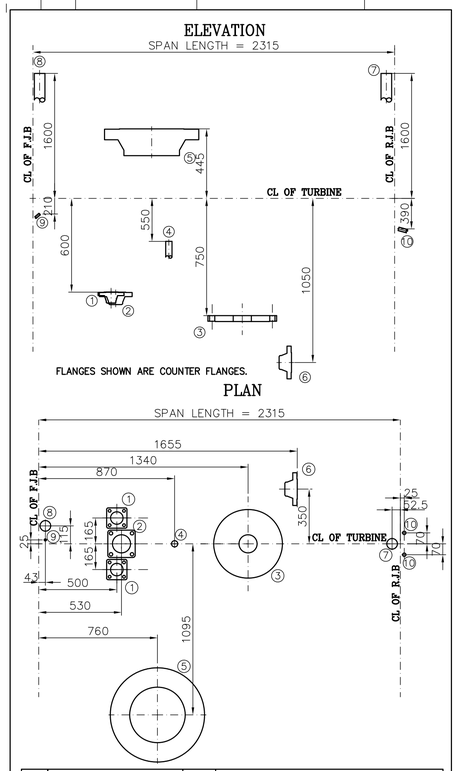

SL. NO.	DESCRIPTION	QTY.	TYPE OF FLANGE
1.	FRONT GLAND INLET	2	DN 80 SQ. FLANGE SUITABLE TO PIPE SIZE ø88.9x5.49
2.	B.P. LINE FROM CASING	1	SQ.FLANGE Nd100
3.	B.P. LINE INTO CASING	1	ABNORMAL FLANGE CONNECTION FOR PIPE ø114.3x4.5
4.	CASING DRAIN	1	DILO PARALLEL MALE STUD CPLG. G1" J1B20G
5.	MAIN STEAM INLET FLANGE	1	14" #600 WNRJ,SCH=30
6.	REAR GLAND INLET	1	SQ. FLANGE SUITABLE TO PIPE ø114.3X6.02
7.	STEAM VENT REAR	1	PIPE ø60.3x3.91
8.	STEAM VENT FRONT	1	PIPE ø60.3x3.91
9.	FRONT GLAND DRAIN	1	G1/4" HOLE (ANGLE AT 50° FROM VERTICAL)
10.	REAR GLAND DRAIN	2	G 1/2" HOLE

SUUPPORT PLATES

DESIG.	PLATE SIZE	FLUSHED/ ℄ ELEVATION	LOAD Kgs.	QTY NO'S
–	–	–	–	–
P2	550x300X12	15.700	1000	4
P3	300x300X12	15.700	800	2
P4	300x300X12	15.700	800	6
P5	300x300X12	16.050	500	2
PC3	100x100X12	15.700	800	2
PC4	100x100X12	15.700	800	2
PC5	200x200X12	15.700	800	2
–	–	–	–	–
IP–6	300X300X12	–	4000	9
IP–7	400X400X12	–	800	5
IP–8	280X400X12	16.05	800	1
IP–9	350X350X12	16.00	500	2
IP–10	300X600X12	–	800	1
IP–11	200X200X12	–	800	2
IP–12	250X250X12	–	800	6
IP–13	240X300X12	–	800	1
IP–14	100X100X12	17.00	1000	6
IP–15	150X150X16	15.700	100	4

NOTES: –

1. THIS DRG.IS VALIED FOR BOTH TDBFP'S (A & B)
2. ALL SUPPORT PLATES SHALL BE IN THE SCOPE OF CIVIL DESIGNER.
3. SPRINGS HEIGHT AND LOCATIONS ARE TO BE DECIDED BY CIVIL DESIGNER.
4. All elevations are marked w.r.t TG hall finished floor elevation as +0.0m which corresponds to above EL (+) 3.50M MSL

LEGEND: –

1. INDICATES LOAD POINTS.
2. SUPPORT PLATE AT BOTTOM OF SLAB.
3. INSULATION FOR FOUNDATION PROTECTION.
4. CUTOUTS AND POCKETS.

PLAN AT 17.00m (FOR PUMP–A)
(FOR PUMP–B ROTATE TOP DECK BY 180°)

FICHTNER Consulting Engineers (India) Private Limited

VENDOR DOCUMENT REVIEW STATUS

- ☐ Action - 1 Approved
- ☐ Action - 2 Approved except as noted. Revise and resubmit for final approval
- ☑ Action - 5 Retained for Information, Reference & Records

Review/Approval of document for the general compliance with the Contract does not constitute a blanket approval of the content of document.The Vendor / Contractor is responsible for correctness of design and details. Approval of document does not relieve the Vendor / Contractor of his responsibility in carrying out the work correctly and fulfilling the complete requirements of the contract, stated or implied, nor does it limit the Purchaser's rights under the Contract.

FI Letter Ref. No.	Date:
1115182/ST/VDT/1000/0001	19.08.2016
Signature	Initials: JCH

Job No.: 422

STATUS : PRELIMINARY

OWNER: SEPC — SEPC POWER PRIVATE LIMITED, S–2, Technocrat Indl. Estate, Balanagar, Hyderabad

CUSTOMER: meil — Megha Engineering & Infrastructures Ltd., S–2, Technocrat Indl. Estate, Balanagar, Hyderabad

CUSTOMER'S CONSULTANT: TPSC INDIA — TPSC (INDIA) PRIVATE LIMITED (Wholly owned subsidiary of Toshiba Plant systems & Services Corporation, Tokyo, Japan) A–1 Module, D–Quadrant, 2nd & 9th Floor, Cyber Towers, Hi–Tec City, Madhapur, HYDERABAD – 500 081, INDIA.

PROJECT: 1X525 MW TUTICORIN TPS, STAGE–IV (UNIT–1) THOOTHUKUDI DISTRICT, TAMILNADU

BHARAT HEAVY ELECTRICALS LTD. HYDERABAD

	NAME	SIGN.	DATE	NO.OF VAR.
DRN.	C.BALAJI		15.04.16	–N.A.–
CHD.	S.J.HUSSAIN		15.04.16	
APPD.	M.A.HASEEB		15.04.16	

DEPT.	UNTOL. DIMS.	SCALE	WEIGHT (KG)	REF. TO ASSY. DRG.	ITEM NO.	NO.OF ITEMS
TCEP CODE. 415	GR. ~~C/M/F~~	1:30	–N.A.–	–N.A.–	–N.A.–	–N.A.–

TITLE: FOUNDATION ARRANGEMENT FOR BFP & DRIVE TURBINE

CARD CODE: N.A.

DRAWING NO.(1–313–01–16735) HY–DG–1–31301–16735 REV. 00

SHT. No 01 NO. OF SHT. 03

REV.	DATE	ALTERED CHD/APPD
ZONE		

JCS

GENERAL DIMENSIONAL LIMITS,FITS & TOLERANCES AS PER HY0230261

THE INFORMATION ON THIS DOCUMENT IS THE PROPERTY OF BHARAT HEAVY ELECTRICALS LIMITED. IT MUST NOT BE USED DIRECTLY OR INDIRECTLY IN ANY WAY DETRIMENTAL TO THE INTEREST OF THE COMPANY

COMPUTER FILE NAME 1313009703S–S01–R00.DWG | REF. DRG. NO. | SIGN. AND DATE | INVENTORY NO

Aug Wed 3 12:53 2016

This Drawing is printed from Engineering Digital Archive System (EDAS). Therefore signatures are not essentially required.

PRODUCED BY AN AUTODESK EDUCATIONAL PRODUCT

PRODUCED BY AN AUTODESK EDUCATIONAL PRODUCT

FIRST ANGLE PROJECTION

(ALL DIMENSIONS ARE IN mm)

DRG. NO. HY-DG-1-31301-16735

SH.02 OF 03

THE INFORMATION ON THIS DOCUMENT IS THE PROPERTY OF BHARAT HEAVY ELECTRICALS LIMITED. IT MUST NOT BE USED DIRECTLY OR INDIRECTLY IN ANY WAY DETRIMENTAL TO THE INTEREST OF THE COMPANY

GENERAL DIMENSIONAL LIMITS,FITS & TOLERANCES AS PER HY0230261

COMPUTER FILE NAME 1313009703S-S02-R00.DWG

REF. DRG. NO.

SIGN. AND DATE

INVENTORY NO

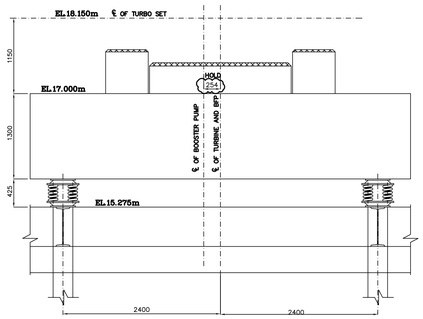

SIDE VIEW

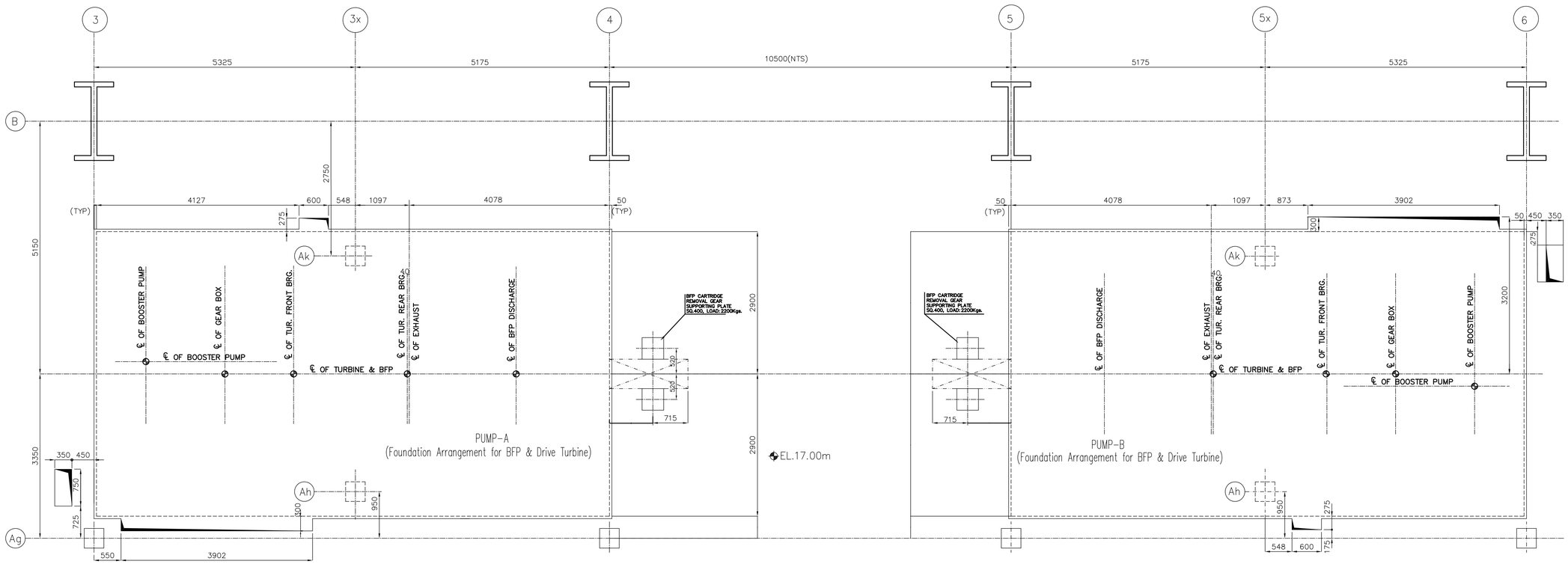

PLAN AT 17.00m
(TDBFP-A)

PLAN AT 17.00m
(TDBFP-B)

OWNER: SEPC	SEPC POWER PRIVATE LIMITED S-2, Technocrat Indl. Estate, Balanagar, Hyderabad
CUSTOMER:	Megha Engineering & Infrastructures Ltd. S-2, Technocrat Indl. Estate, Balanagar, Hyderabad
CUSTOMER'S CONSULTANT: TPSC INDIA	TPSC (INDIA) PRIVATE LIMITED (Wholly owned subsidiary of Toshiba Plant systems & Services Corporation, Tokyo, Japan) A-1 Module, D-Quadrant, 2nd & 9th Floor, Cyber Towers, Hi-Tec City, Madhapur, HYDERABAD - 500 081, INDIA.
PROJECT:	1X525 MW TUTICORIN TPS, STAGE-IV (UNIT-1) THOOTHUKUDI DISTRICT, TAMILNADU

Job No.: 422

STATUS : PRELIMINARY

BHEL-HYD EDAS ENGINEERING DATA

PREPARED: BHARAT HEAVY ELECTRICALS LTD. HYDERABAD

	NAME	SIGN.	DATE	NO.OF VAR.
DRN.	C.BALAJI		15.04.16	-N.A.-
CHD.	S.J.HUSSAIN		15.04.16	
APPD.	M.A.HASEEB		15.04.16	

DEPT.	UNTOL. DIMS.	SCALE	WEIGHT (KG)	REF. TO ASSY. DRG.	ITEM NO.	NO.OF ITEMS
TCEP CODE. 415	GR. ~~C/M/F~~	1:30	-N.A-	-N.A-	-N.A.-	-N.A.-

TITLE: FOUNDATION ARRANGEMENT FOR BFP & DRIVE TURBINE

CARD CODE: N.A.

DRAWING NO.(1-313-01-16735): HY-DG-1-31301-16735

REV. 00

SHT. No 02 NO. OF SHT. 03

REV.	DATE	ALTERED	CHD/APPD
ALTERED. C.BALAJI			CHD/APPD. SJH/MAH
ALTERED.			CHD/APPD.

ZONE

JCS

Aug Wed 3 12:54 2016

This Drawing is printed from Engineering Digital Archive System (EDAS).
Therefore signatures are not essentially required.

PRODUCED BY AN AUTODESK EDUCATIONAL PRODUCT

PRODUCED BY AN AUTODESK EDUCATIONAL PRODUCT

FIRST ANGLE PROJECTION

(ALL DIMENSIONS ARE IN mm)

DRG. NO. HY-DG-1-31301-16735 SH.03 OF 03

TYPE OF TURBINE :– K 1401–2		
TYPE OF BOILER FEED PUMP :– FK 4E 36		
TYPE OF BOOSTER PUMP :– FA 1B 75		
WEIGHT OF SINGLE HEAVIEST PIECE FOR		
	ERECTION in kg.	MAINTENANCE in kg.
TURBINE	26600	7000
BFP	11500	4000
BP	4600	300
DIRECTION OF ROTATION VIEWED FROM BOOSTER PUMP TO BFP FOR :–		
TURBINE – COUNTER CLOCKWISE		
BFP – COUNTER CLOCKWISE		
BP – CLOCK WISE		

NOTE :– The installation details shown here are only informative. For final installation, ref. the Assembly drawings furnished alongwith the respective equipment.

DETAILS FOR FOUNDATION CALCULATIONS

NOTES :–

1. All dimensions are in mm and elevations are in metres.
2. This foundation drawing is only intended as basis for preparing the layout for foundation (by the BHEL). All civil structural dimensions are tentative and same shall be decided by the civil engineer concerned. The foundation design calculations shall consider all the static and dynamic loads acting simultaneously.
3. Suitable earth quake coefficient applicable for the project site should be adopted for seismic design of foundation as per IS 1893.
4. The foundation block should be designed so that natural frequencies of foundation are sufficiently away from the frequencies of machines. The design shall be as per DIN 4024 standard and IS.2974 part III.
5. Design of the foundation shall consider the allowable limits of vibration behaviour of machines as per ISO 10816 Part.3 (Table A.1 Supprt class: Rigid Zone boundary: A/B)
6. Bearing failure loads are less than failure load condition loads specified in col. 7 of the "Forces on Foundation " table.
8. Dynamic loads in axial direction are negligible.
9. Magnitude of unbalanced forces can be taken in vertical and horizontal directions as equal.
10. Max. live load on top of the deck is : 2000 kg./sq.m
11. Foundation block must not be joined to any other structure to avoid vibration transmission.
12. Portions shown thus in top deck are filled with secondary grouting. The concrete surface in these areas is to be ensured free from dust, grease and oil. Any wooden plugs present in these areas are to be removed. The packing plates below the machine sole plates shall be embedded into a 20 mm thick layer of special grout (local to plates) and are to be levelled horizontally. later, total secondary grouting may be completed.
13. For grouting instructions ref. TC–9–1901 (5 sheets). And for grouting cement specification ref. TC–9–1900.

FORCES ON FOUNDATION IN kgf

LOAD POINT / LOAD CONDITION	STATIC LOAD WITHOUT ROTATING WEIGHT	ROTATING WEIGHT	OPERATING WEIGHT OF CONDENSER/VACUUM PULL	SHORT CIRCUIT LOAD *	LOAD DUE TO OPERATING TORQUE	OPERATING UNBALANCE DYN. LOAD (ROTATING) **	FAILURE MODE LOAD ** (Turbine : Blade breakage
	1	2	3	4	5	6	7
A	–	1621	–	–	–	648	3888
A1	4665	–	–	–	–629	–	–
A2	4665	–	–	–	+629	–	–
B	–	–	–	–	–	–	–
B1	6845	980	6930	–	–315	390	2340
B2	6845	980	6930	–	+315	390	2340
3A	1000 EACH	315	–	–	± 785 EACH	32	–
C	330	–	–	–	–	–	–
C1	–	550	–	–	+2019	58	348
C2	–	220	–	–	–2019	88	528
5A	2500 EACH	600	–	–	± 750 EACH	60	–
5B	2500 EACH	600	–	–	–	60	–

** At each supporting point acting in radial direction over 360 deg.
* Loads on either side of TG axis act in opposite directions and the direction changes at 50 cycles/sec.

NOTE :–1. DOWNWARD FORCES ARE POSITIVE
2. GRADE OF BALANCING: TURBINE: A1.6, BFP, BP: G2.5
3. MASS MOMENT OF INERTIA: TURBINE: 95.42Kg. Sq.m.
BFP :144 Kg. Sq.m, BP : 8.4 Kg. Sq.m] GD^2

SPEEDS:

EQUIPMENT	OPERATING MARGIN	RATED DESIGN	TRIP SPEED	CRITICAL SPEEDS
TURBINE	1495 TO 5730	5730	6017	9415

DETAIL – M

TYPICAL FOUNDATION BOLT ARRANGEMENT FOR COMMON FOUNDATION FRAME

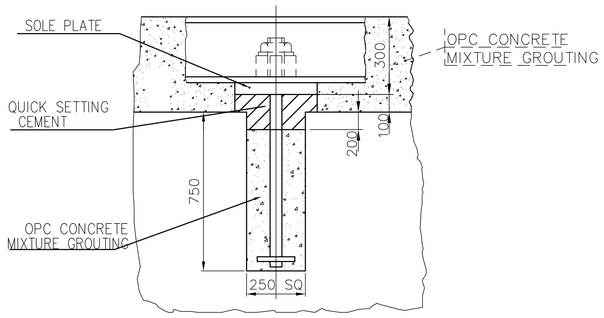

HORIZONTAL FRICTIONAL FORCES IN kgf

A– Working point of forces at front : 680 mm
B1,B2– Working point of forces at rear : 480 mm
C1,C2– Working point of forces at gear rear : 1067 mm
below turbine axis

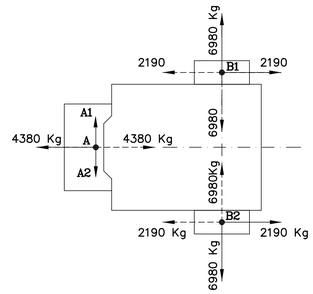

THESE FORCES ALTERNATE IN DIRECTION

DETAIL – S

FOUNDATION BOLT ASSEMBLY

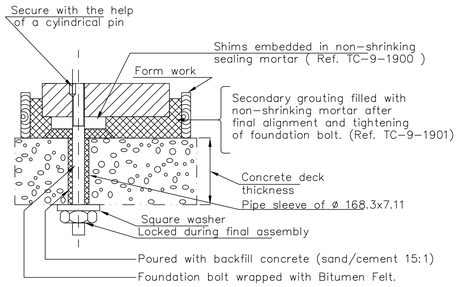

Note: Sealing mortar pouring and bitumen shall be part of ERECTION contract

DETAIL – B

PROPOSED TRENCH COVER

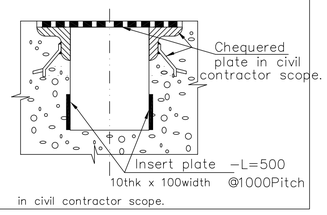

in civil contractor scope.

Job No.: 422
STATUS : PRELIMINARY

OWNER: SEPC POWER PRIVATE LIMITED
S–2, Technocrat Indl. Estate, Balanagar, Hyderabad

CUSTOMER: Megha Engineering & Infrastructures Ltd.
S–2, Technocrat Indl. Estate, Balanagar, Hyderabad

CUSTOMER'S CONSULTANT: TPSC (INDIA) PRIVATE LIMITED
(Wholly owned subsidiary of Toshiba Plant systems & Services Corporation, Tokyo, Japan)
A–1 Module, D–Quadrant, 2nd & 9th Floor, Cyber Towers, Hi–Tec City, Madhapur, HYDERABAD – 500 081, INDIA.

PROJECT: 1X525 MW TUTICORIN TPS, STAGE–IV (UNIT–1)
THOOTHUKUDI DISTRICT, TAMILNADU

BHARAT HEAVY ELECTRICALS LTD. HYDERABAD

	NAME	SIGN	DATE	NO.OF VAR.
DRN.	C.BALAJI		15.04.16	–N.A.–
CHD.	S.J.HUSSAIN		15.04.16	
APPD.	M.A.HASSEN		15.04.16	

DEPT. TCEP CODE. 415 | UNTOL. DIMS. GR. ~~C/M/F~~ | SCALE 1:30 | WEIGHT (KG) –N.A.– | REF. TO ASSY. DRG. –N.A.– | ITEM NO. –N.A.– | NO.OF ITEMS –N.A.–

TITLE FOUNDATION ARRANGEMENT FOR BFP & DRIVE TURBINE

CARD CODE N.A. | DRAWING NO.(1–313–01–16735) HY–DG–1–31301–16735 | REV. 00 | SHT. No 03 NO. OF SHT. 03

REV.	DATE	ALTERED	CHD/APPD	ZONE

JCS

THE INFORMATION ON THIS DOCUMENT IS THE PROPERTY OF BHARAT HEAVY ELECTRICALS LIMITED. IT MUST NOT BE USED DIRECTLY OR INDIRECTLY IN ANY WAY DETRIMENTAL TO THE INTEREST OF THE COMPANY

GENERAL DIMENSIONAL LIMITS,FITS & TOLERANCES AS PER HY0230261

COMPUTER FILE NAME 1313009703S–S03–R00.DWG

INVENTORY NO | SIGN. AND DATE | REF. DRG. NO.

Aug Wed 3 12:54 2016
This Drawing is printed from Engineering Digital Archive System (EDAS). Therefore signatures are not essentially required.
PRODUCED BY AN AUTODESK EDUCATIONAL PRODUCT

FIRST ANGLE PROJECTION

(ALL DIMENSIONS ARE IN mm)

DRG. NO. 1 18000 57782

THE INFORMATION ON THIS DOCUMENT IS THE PROPERTY OF BHARAT HEAVY ELECTRICALS LIMITED.
IT MUST NOT BE USED DIRECTLY OR INDIRECTLY IN ANY WAY DETRIMENTAL TO THE INTEREST OF THE COMPANY

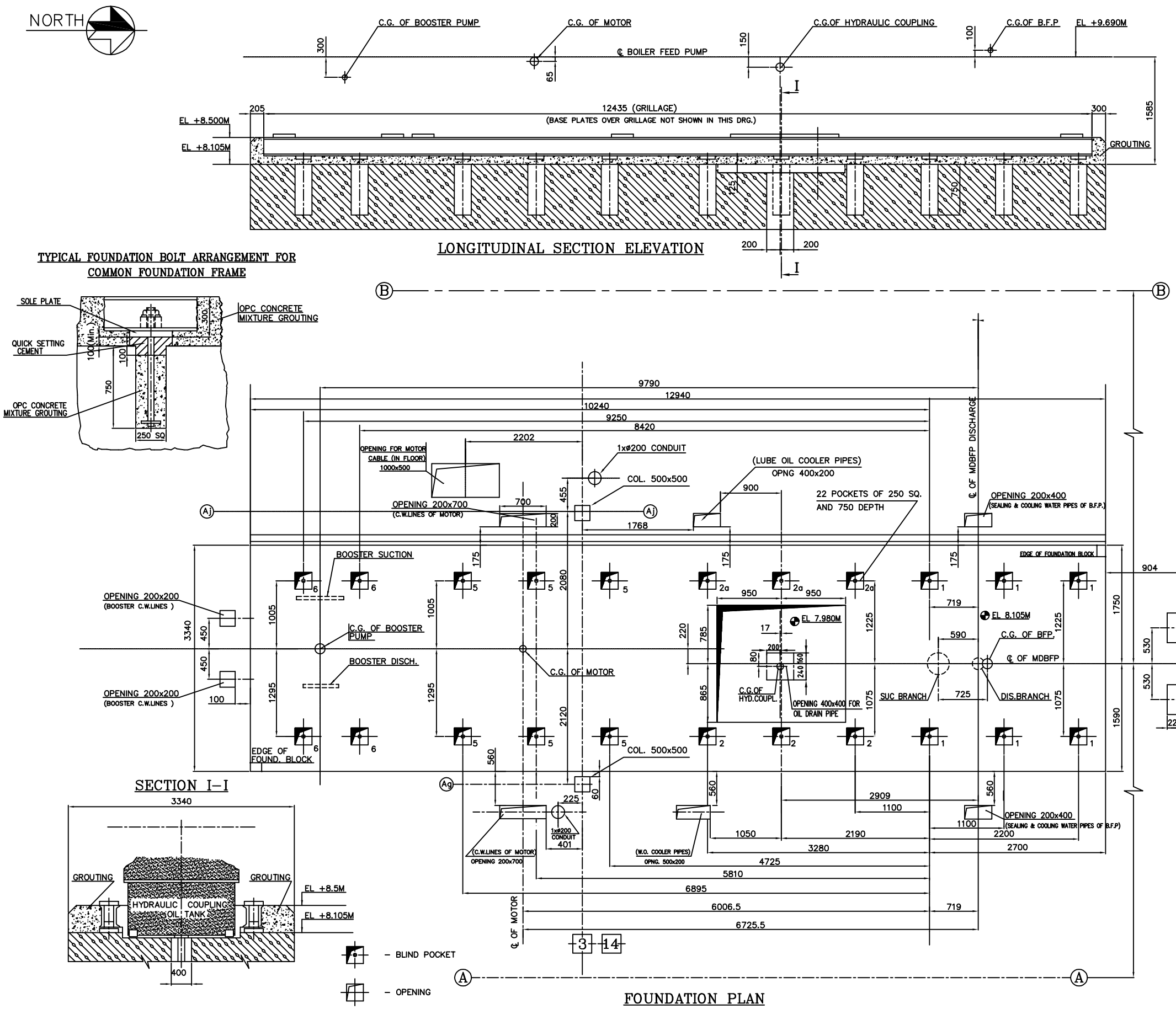

FOUNDATION LOADING

LOAD APPLICATION POINT	EQUIPMENT	WEIGHT (Kgs) PLEASE CHECK	STATIC LOADING ON EACH POINT (Kgs.)	ROTOR WEIGHT (Kgs)	DYNAMIC LOADING ON EACH POINT (Kgs)
1	BOILER FEED PUMP incl. BASE PLATE	11500	11000/6 = 1917	551	3000/6 = 500
2 2a	HYDRAULIC COUPLING	9300 (WITHOUT OIL) 11800 (WITH OIL)	3933	INPUT ROTOR =1970 PRIMARY ROTOR =505 SECONDARY ROTOR =460 OUTPUT ROTOR =305	Pt 2 1030 Pt 2a 920
5	MOTOR	23000	3850	6100	REFER NOTE–A
6	BOOSTER PUMP incl. BASE PLATE	4600	4600/4 =1150	280	1575/4 = 394
1,2,2a, 5 & 6	COMMON FOUNDATION FRAME	11800	540	---	---

$G\,D^2$ OF

1. BOILER FEED PUMP : 14.4 KG–M^2
2. BOOSTER PUMP : 8.4 KG–M^2
3. HYDRAULIC COUPLING
   INPUT SHAFT : 1508 KG–M^2
   OUTPUT SHAFT : 41.2 KG–M^2
4. MOTOR : 2040 KG–M^2

NOTE–A

MOTOR FOUNDATION DETAILS

1. MAX. FORCE CALCULATED FROM THE MAX. SUDDEN TORQUE (100% RESIDUAL FIELD), M_S = 327 kN.
2. FORCE EXERTED BY THE WEIGHT ON EACH SIDE, G = 115 kN.
3. FOUNDATION LOAD ON EACH SIDE
   COMPRESSIVE STRESS, A = Ms+G = 442 kN ; TENSILE STRESS, B = Ms–G = 212 kN.

NOTE–B

1. FOR GENERAL ARRANGEMENT OF MDBFP SET, REFER DRG.NO.: HY–DG–11800057784

OWNER: SEPC	SEPC POWER PRIVATE LIMITED S–2, Technocrat Indl. Estate, Balanagar, Hyderabad
CUSTOMER: mell	Megha Engineering & Infrastructures Ltd. S–2, Technocrat Indl. Estate, Balanagar, Hyderabad
CUSTOMER'S CONSULTANT: TPSC INDIA	TPSC (INDIA) PRIVATE LIMITED (Wholly owned subsidiary of Toshiba Plant systems & Services Corporation, Tokyo, Japan) A–1 Module, D–Quadrant, 2nd & 9th Floor, Cyber Towers, Hi–Tec City, Madhapur, HYDERABAD – 500 081, INDIA.
PROJECT:	1X525 MW TUTICORIN TPS, STAGE–IV (UNIT–1) THOOTHUKUDI DISTRICT, TAMILNADU
	BHARAT HEAVY ELECTRICALS LTD POWER SECTOR PROJECT ENGINEERING MANAGEMENT NOIDA

JOB NO.	422
STATUS	CONTRACT
DISTRIBUTION	

DATE	ALTD	CHD	APPD

COPY RIGHT AND CONFIDENTIAL
The information on this document is the property of BHARAT HEAVY ELECTRICALS LIMITED It must not be used directly or indirectly in any way detrimental to the interest of the company.

DEPT CODE	DSN	NAME	SIGN	DATE
	DESN	RAKESH.L		02.09.16
	CHD	RAJURAO.D		02.09.16
	APPD	K.R.R.K		02.09.16

TITLE: FOUNDATION ARRANGEMENT OF MDBFP

DEPT. | SCALE | SIGN | DRAWING NO. HY–DG–1–18000–57782 | SHEET | REV. 00

REV.	DATE	ALTERED	CHECKED	APPD.
01		CHKD/ APPD		
01		CHKD/ APPD		

ZONE

COMPUTER FILE NAME : | REF. DRG. NO. | SIGN. AND DATE | INVENTORY NO

FIRST ANGLE PROJECTION

(ALL DIMENSIONS ARE IN mm)

DRG. NO. 1 18000 57784

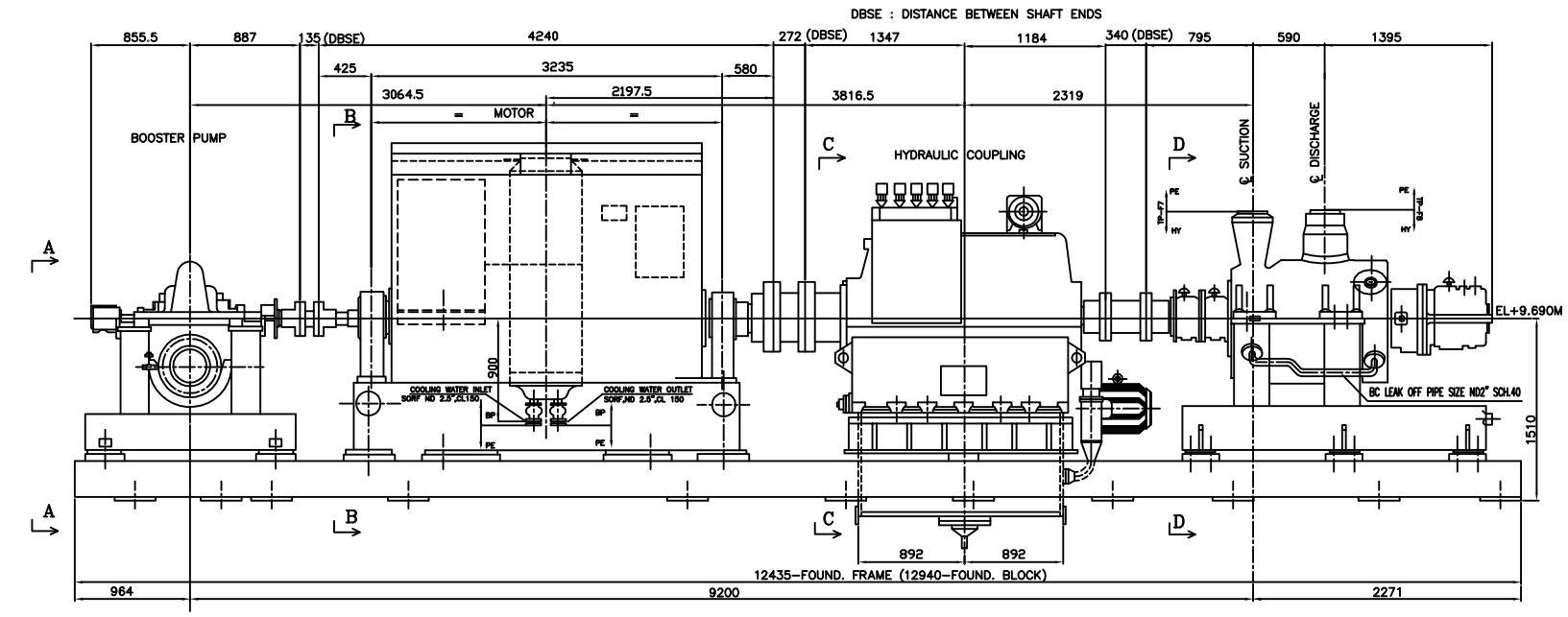

ELEVATION

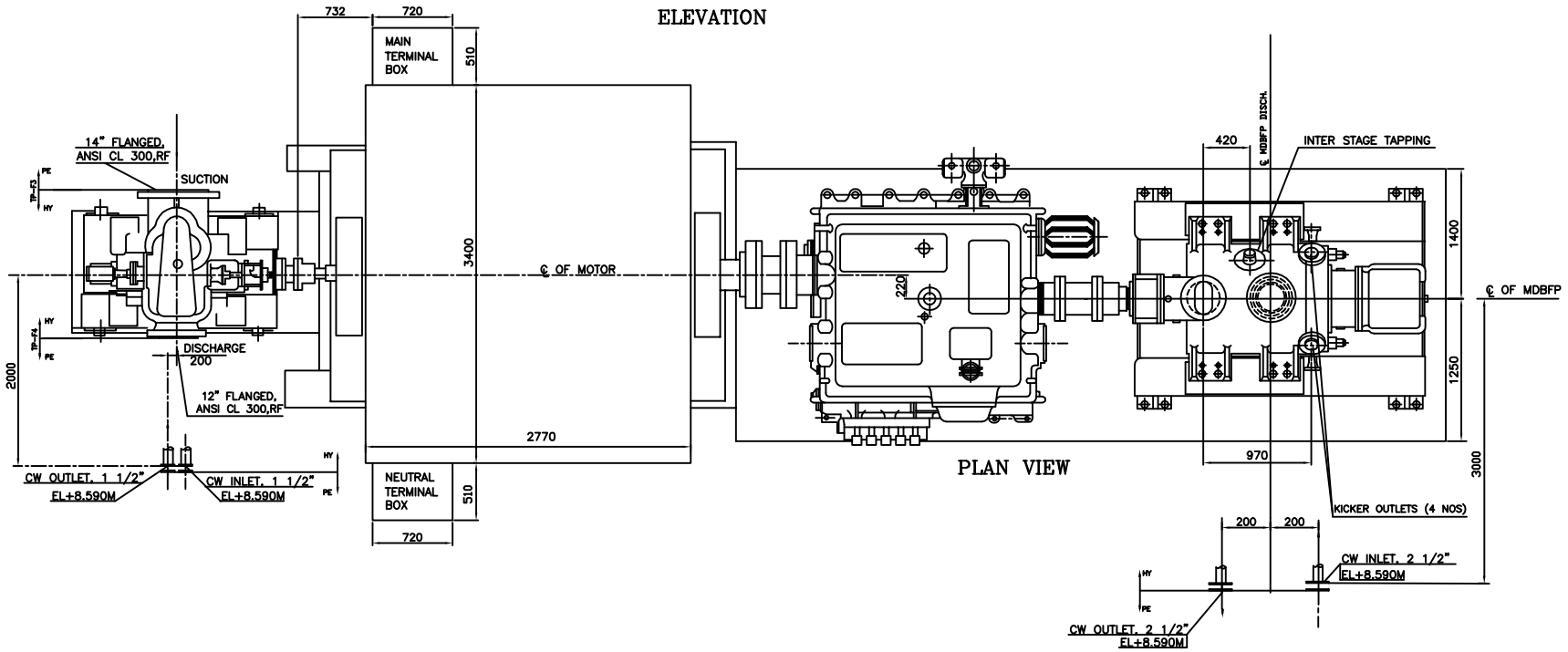

PLAN VIEW

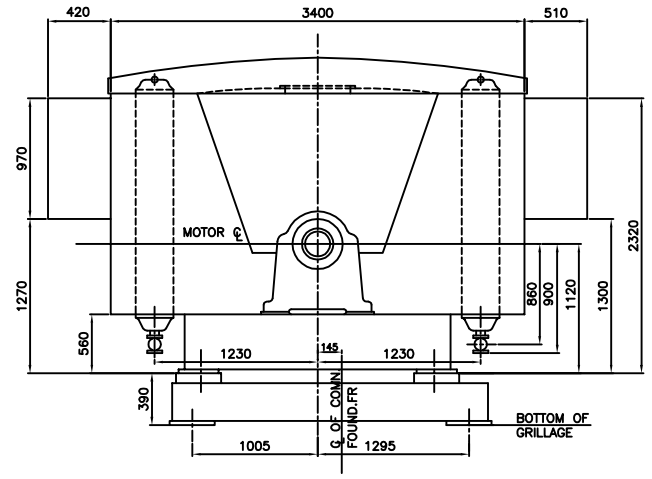

VIEW–'BB' (MOTOR)

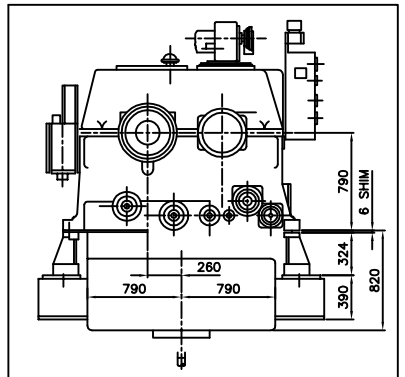

VIEW–'CC' (HYD. CPLG.)

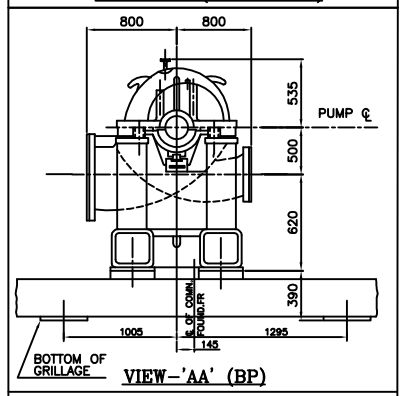

VIEW–'AA' (BP)

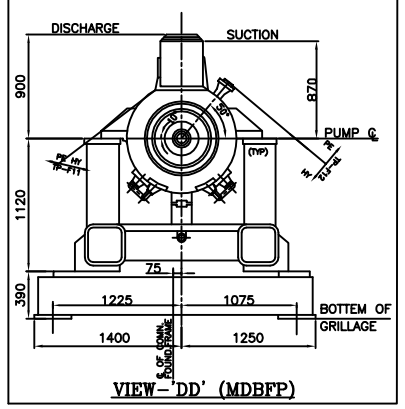

VIEW–'DD' (MDBFP)

KEY PLAN & CARTRIDGE REMOVAL SPACE OF MDBFP SET

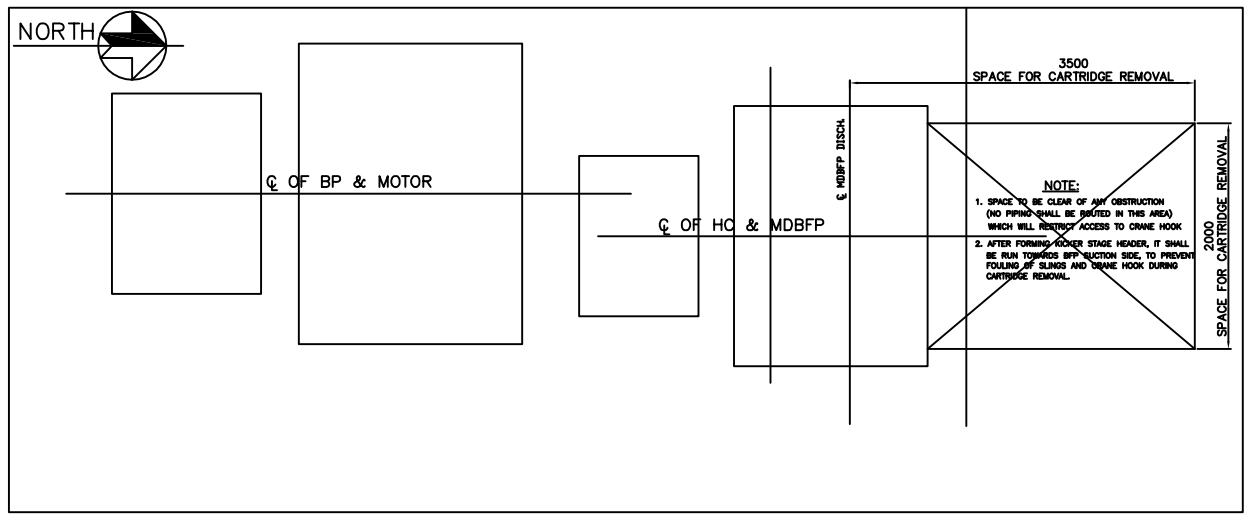

TERMINAL POINTS

TERMINAL POINT	DESCRIPTION	TERMINATED WITH	QTY.
TP–F7	SUCTION OF FEED PUMP	NOZZLE, BUTT WELD END,TO SUIT PIPE ø 406.4X 9.53MM	1
TP–F8	DISCHARGE OF FEED PUMP	NOZZLE, BUTT WELD END,TO SUIT PIPE ø368 X 48 MM	1
TP–F12	INTER STAGE TAPPING	COUNTER FLANGE, 2.5" ANSI, B 16.5, WNRF, CL1500	1
TP–F3	SUCTION OF BOOSTER PUMP	COUNTER FLANGE, 14" ANSI, B16.5, WNRF, CL300	1
TP–F4	DISCHARGE OF BOOSTER PUMP	COUNTER FLANGE, 12" ANSI, B16.5, WNRF, CL300	1

SCOPE OF SUPPLY	
	HY BHEL, HYDERABAD SCOPE
	BP BHEL, BHOPAL SCOPE
	PE BHEL, PEM SCOPE

NOTE :

1. TERMINAL POINTS SHOWN IN THE HYD. SCOPE INCLUDES COUNTER FLANGES ALONG WITH FASTENERS & GASKETS.
2. FOR LOADING POINTS & LOADS, REFER MDBFP FOUND. DRG.NO.: HY–DG–1–18000–57782

THE INFORMATION ON THIS DOCUMENT IS THE PROPERTY OF BHARAT HEAVY ELECTRICALS LIMITED. IT MUST NOT BE USED DIRECTLY OR INDIRECTLY IN ANY WAY DETRIMENTAL TO THE INTEREST OF THE COMPANY

REV.	DATE	ALTERED	CHD./APPD.

OWNER: SEPC POWER PRIVATE LIMITED
S–2, Technocrat Indl. Estate, Balanagar, Hyderabad

CUSTOMER: Megha Engineering & Infrastructures Ltd.
S–2, Technocrat Indl. Estate, Balanagar, Hyderabad

CONSULTANT: TPSC (INDIA) PRIVATE LIMITED
(Wholly owned subsidiary of Toshiba Plant systems & Services Corporation, Tokyo, Japan)
A–1 Module, D–Quadrant, 2nd & 9th Floor, Cyber Towers, Hi–Tec City, Madhapur, HYDERABAD – 500 081, INDIA.

PROJECT: 1X525 MW TUTICORIN TPS, STAGE–IV (UNIT–1)
THOOTHUKUDI DISTRICT, TAMILNADU

MFG BY: BHARAT HEAVY ELECTRICALS LTD
POWER SECTOR
PROJECT ENGINEERING MANAGEMENT
NOIDA

JOB NO. 422
STATUS CONTRACT
DISTRIBUTION

DATE	ALTD	CHD	APPD

COPY RIGHT AND CONFIDENTIAL
The information on this document is the property of BHARAT HEAVY ELECTRICALS LIMITED it must not be used directly or indirectly in any way detrimental to the interest of the company.

	DEPT CODE	NAME	SIGN	DATE
DRN				
DESIGN		RAMKUMAR T.		08.09.10
CHD		RAMKUMAR.D		08.09.10
APPD		K.H.S.N		08.09.10

TITLE: GENERAL ARRANGEMENT OF MDBFP SET

DEPT. | SCALE | SIGN | DRAWING NO. HY–DG–1–18000–57784 | SHEET | REV. 00